Xvision™

CCTV

TECHNICAL SUPPORT:

For Technical Support for any Xvision product please contact your local distributor.

LIMITED WARRANTY:

This product is supplied with a 1 Year warranty. The Warranty excludes products that have been misused, (including accidental damage) and damage caused by normal wear and tear. In the unlikely event that you encounter a problem with this product, it should be returned to the place of purchase.

Manufactured exclusively for:
Xvision (Europe) Group,
Head Office: London, U.K.
Email: info@x-vision.co.uk
Web: www.x-vision.co.uk

Xvision™

CCTV

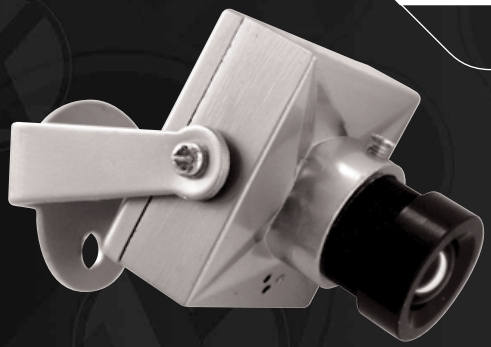

Model: VIS125
Colour Camera

Before you begin

- Please unpack the box carefully and identify that all the parts are present.

The camera is suitable for indoor use. Please bear in mind the following points when choosing a mounting position.

- The camera must be positioned so that it will not point directly into the sun (sunrise and sunset) or any bright light, as this may cause damage to the camera.
- Avoid viewing areas where half the area is in bright sunlight and the other half is dark, such as in the shadow of a building. All types of cameras have difficulty in 'seeing' with such a large lux level variation.

- Do not open the camera housing. This will void the warranty and break the warranty seal inside the camera.
- Do not cut the camera cables, this will void the warranty.
- Make sure you use only the recommended power supply. Damage caused to the camera by incorrect voltage or wiring is not covered by the warranty.

Model:
VIS125
Colour Mini Camera

Mounting Options

Wall Mount

Ceiling Mount

Package Contents

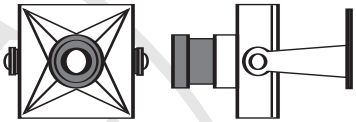

VIS125 Camera

Wiring

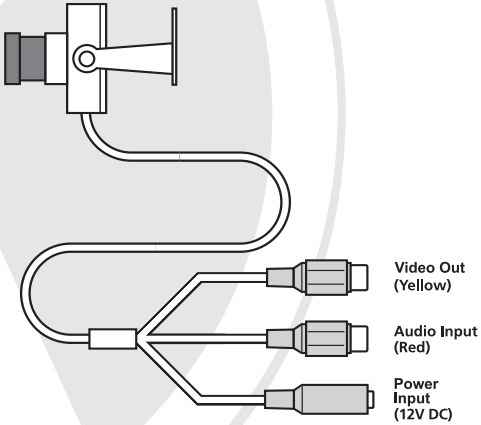

1. Connect power to the black power jack.
2. Connect video feed to the yellow phono type connector and audio to the red phono type connector.
3. Test that the camera is functioning fully before finalising the position of the camera.

Specification

Model:	**VIS125**
Picture Type:	Colour
Image Sensor:	1/3" Digital CMOS
DSP:	None
Resolution:	350TVL
Lens Viewing Angle:	43°
Infra Red Nightvision:	No
Minimum Illumination:	2.0 Lux
Audio:	Yes
Operating Voltage:	12V DC 110mA
Suggested Power Supply:	12V DC 300mA Regulated
Mounting:	Wall/Ceiling
Weatherproofing:	Yes
Dimensions:	30x30x10mm